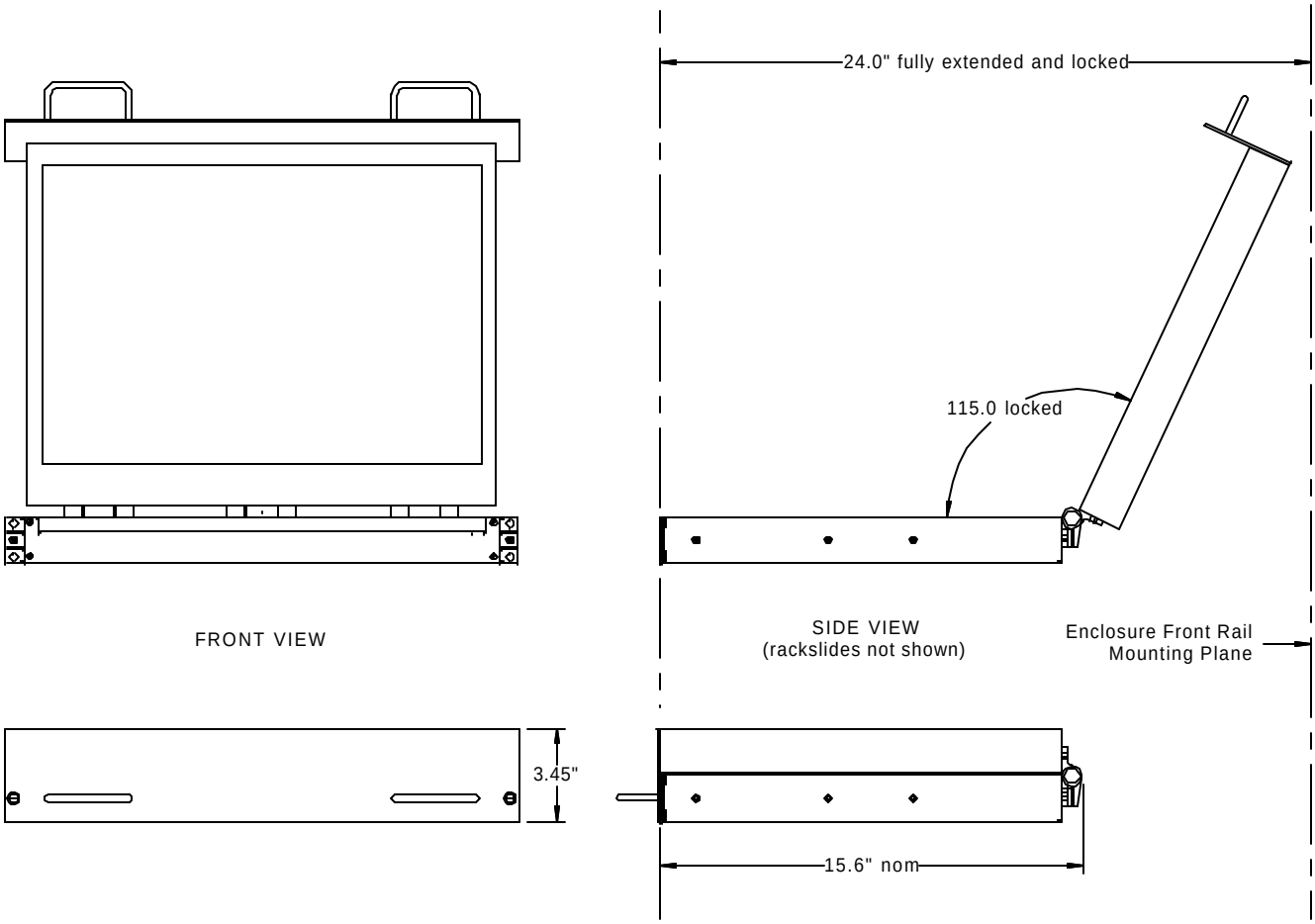
24.0" fully extended and locked
115.0 locked
FRONT VIEW
SIDE VIEW
(rackslides not shown)
Enclosure Front Rail
Mounting Plane
3.45"
15.6" nom

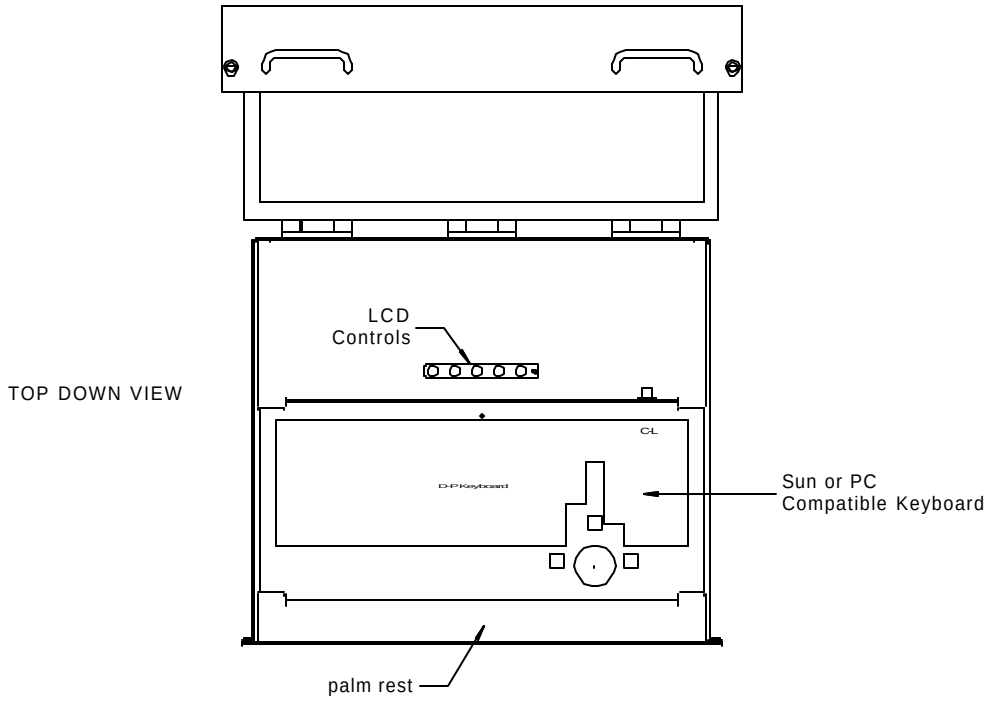
TOP DOWN VIEW
LCD
Controls
CL
D-P Keyboard
Sun or PC
Compatible Keyboard
palm rest